Op-Amp Inverting Amp

1

$$G=\frac{R_f}{R_s+R_{Th<}}$$

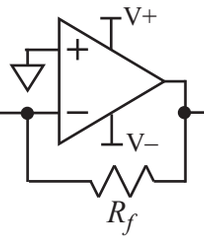

$R_{Th}\approx 0\,\Omega$

Op-Amp Non-Inverting Amp

2

$$G=\frac{R_f+R_s}{R_s}$$

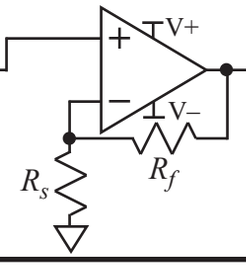

$R_{Th}\approx 0\,\Omega$

Op-Amp Buffer (V-Follower)

3

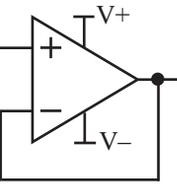

$R_{Th}\approx 0\,\Omega$

Op-Amp (Inv) Summing Amp

4

$$G_1=\frac{R_f}{R_{s1}+R_{Th1<}}$$

$$G_2=\frac{R_f}{R_{s2}+R_{Th2<}}$$

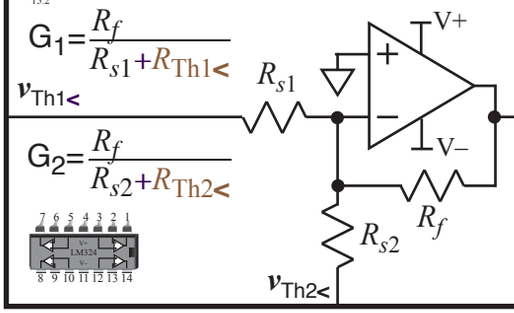

$R_{Th}\approx 0\,\Omega$

Op-Amp Non-Inverting Summer

5

$$G_1=\frac{R_b+R_{Th2<}}{R_a+R_b+R_{Th<Tot}}$$

$$R_{Th<Tot}=R_{Th1<}+R_{Th2<}$$

$$G_2=\frac{R_a+R_{Th1<}}{R_a+R_b+R_{Th<Tot}}$$

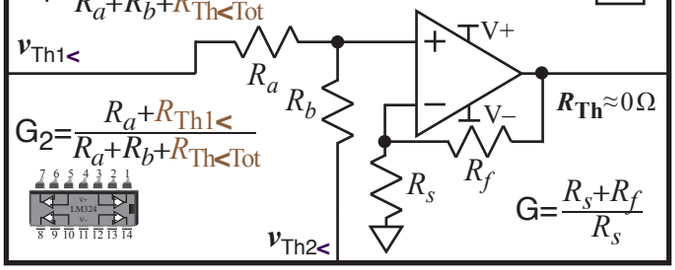

$R_{Th}\approx 0\,\Omega$

$$G=\frac{R_s+R_f}{R_s}$$

Op-Amp Differential Amp

6

$$G_1=\frac{R_{f1}}{R_{s1}+R_{Th1<}}$$

$$G_2=\frac{R_{f2}}{R_{s2}+R_{Th2<}}$$

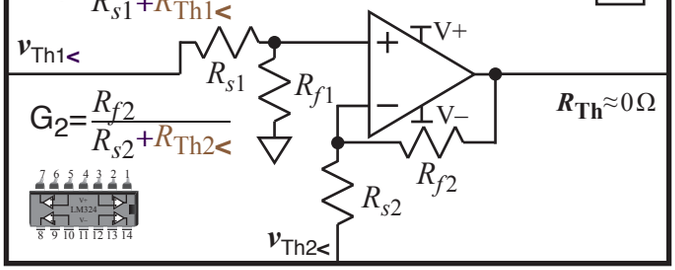

$R_{Th}\approx 0\,\Omega$

Op-Amp Difference Amp

7

$$G_1=\frac{R_b}{R_a+R_b+R_{Th1<}}$$

$$G_2=\frac{R_f}{R_s+R_{Th2<}}$$

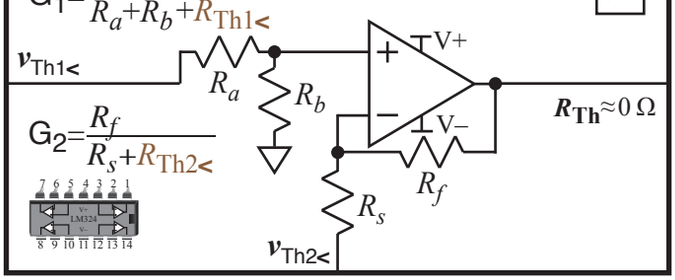

$R_{Th}\approx 0\,\Omega$

Op-Amp

8

$$G=\frac{R_f}{R_{Th2<}}$$

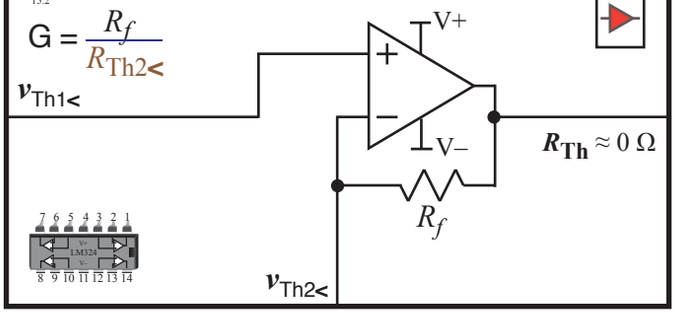

$R_{Th}\approx 0\,\Omega$