Comparator

1

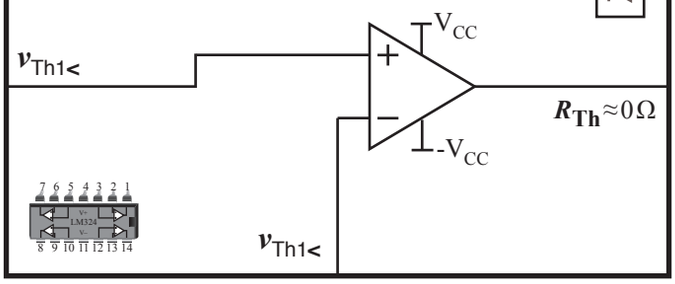

Comparator with V-Ref

2

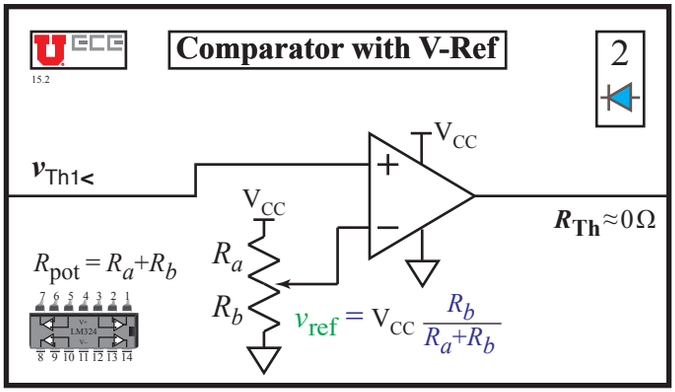

LED: Red

3

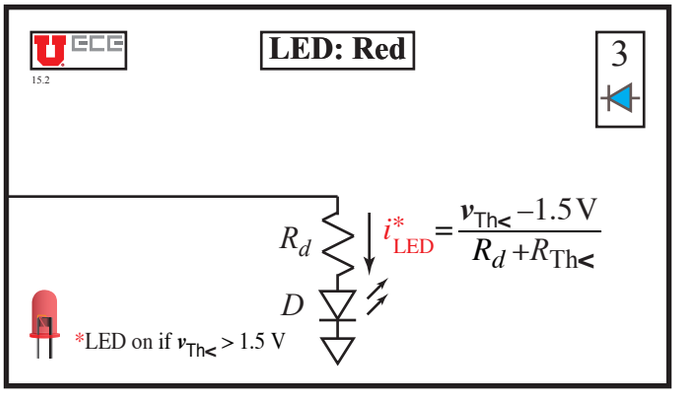

LED: Green

4

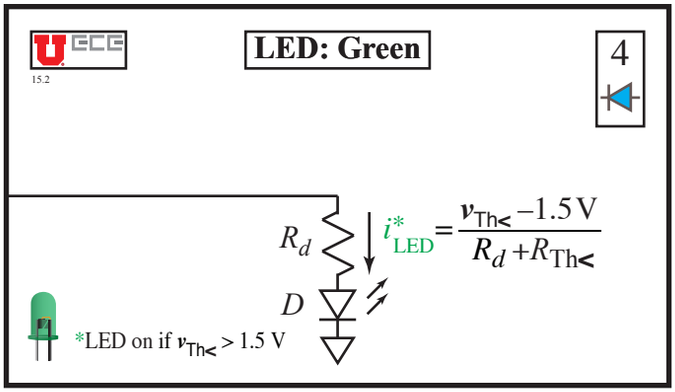

Op-Amp Level-Shifter

9

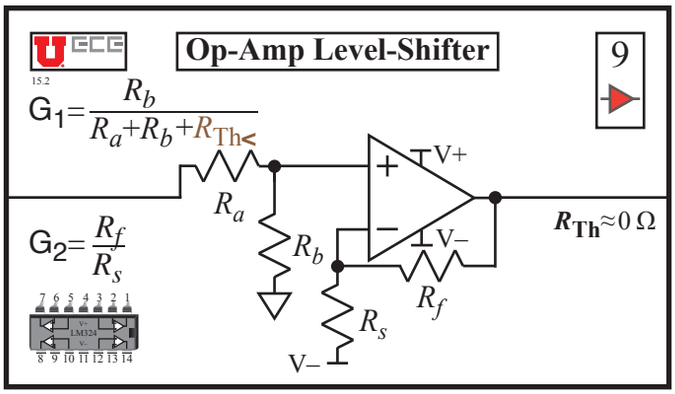

Voltage Reference

9

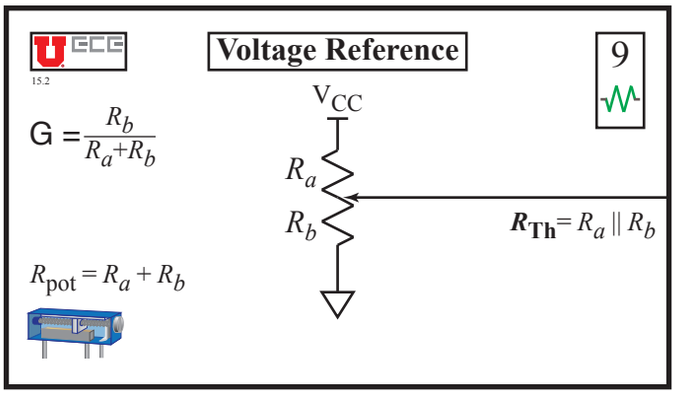

Op-Amp Level-Shifter

9

$$\frac{R_f}{R_s} = G_2 = \frac{\Delta v_{Th} \overline{v_{Th<}} - \overline{v_{Th}} \Delta v_{Th<}}{(V-)\,\Delta v_{Th<}}$$

$$\frac{R_b}{R_a' + R_b} = G_1 = \frac{\Delta v_{Th}}{\Delta v_{Th<}(1 + G_2)}$$

Voltage Reference
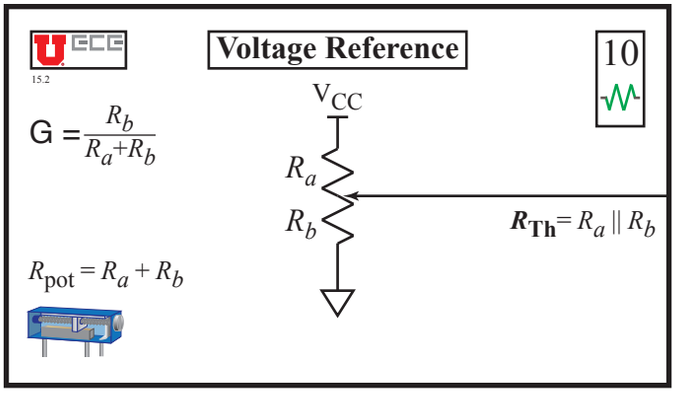
10