## Op-Amp Inverting Amp

1

$$G = \frac{R_f}{<R_{Th} + R_s}$$

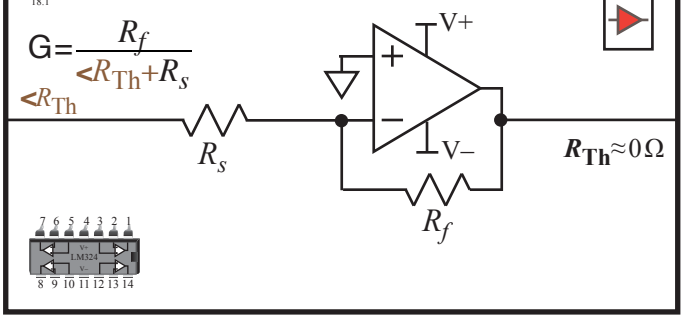


## Op-Amp Non-Inverting Amp

2

$$G = \frac{R_f + R_s}{R_s}$$

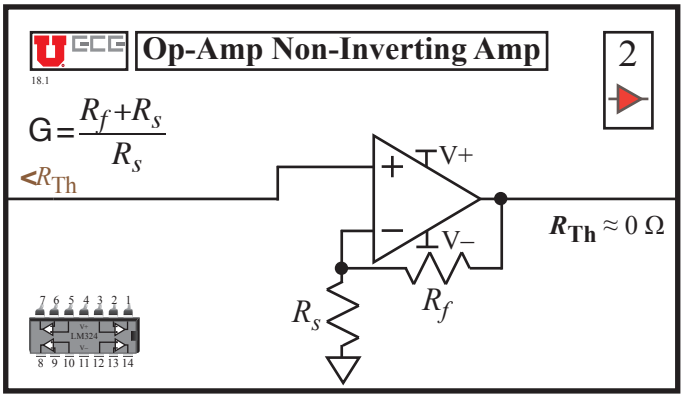


## Op-Amp Buffer (V-Follower)

3

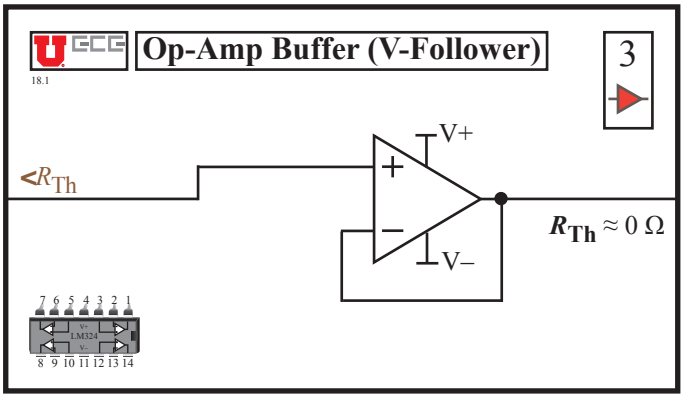


## Op-Amp (Inv) Summing Amp

4

$$G_1 = \frac{R_f}{<R_{Th1} + R_{s1}}$$

$$G_2 = \frac{R_f}{<R_{Th2} + R_{s2}}$$

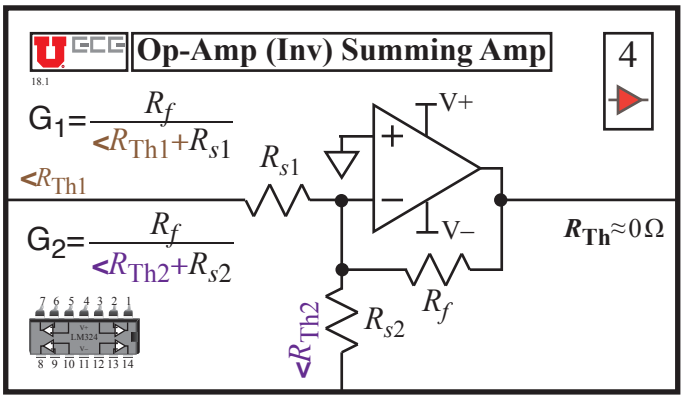


## Op-Amp Non-Inverting Summer

5

$$G_1 = \frac{<R_{Th2} + R_b}{<R_{ThTot} + R_a + R_b}$$

$$<R_{ThTot} = <R_{Th1} + <R_{Th2}$$

$$G_2 = \frac{R_a + R_{Th1}<}{<R_{ThTot} + R_a + R_b}$$

$$G = \frac{R_s + R_f}{R_s}$$

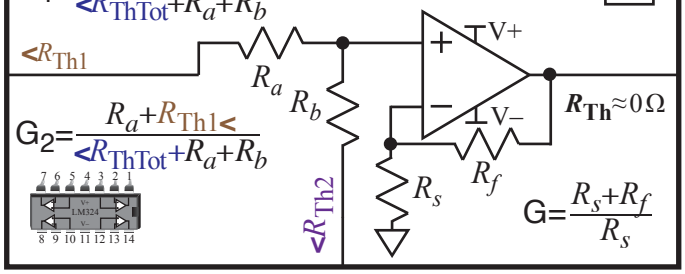


## Op-Amp Differential Amp

6

$$G_1 = \frac{R_{f1}}{<R_{Th1} + R_{s1}}$$

$$G_2 = \frac{R_{f2}}{<R_{Th2} + R_{s2}}$$

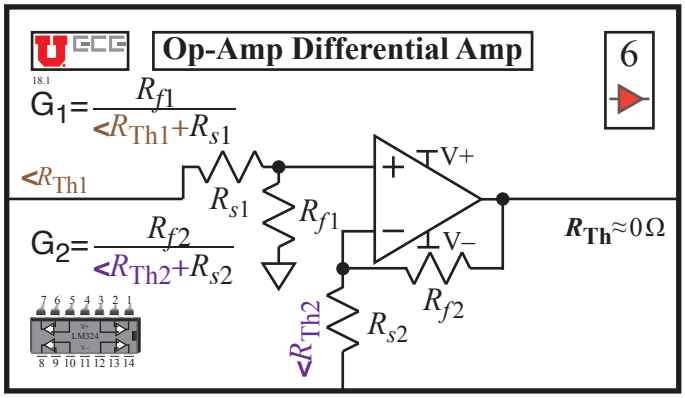


## Op-Amp Difference Amp

7

$$G_1 = \frac{R_b}{<R_{Th1} + R_a + R_b}$$

$$G_2 = \frac{R_f}{<R_{Th2} + R_s}$$

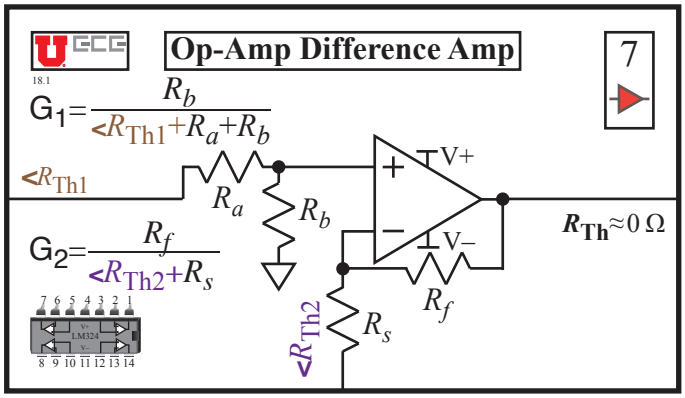


## Op-Amp

8
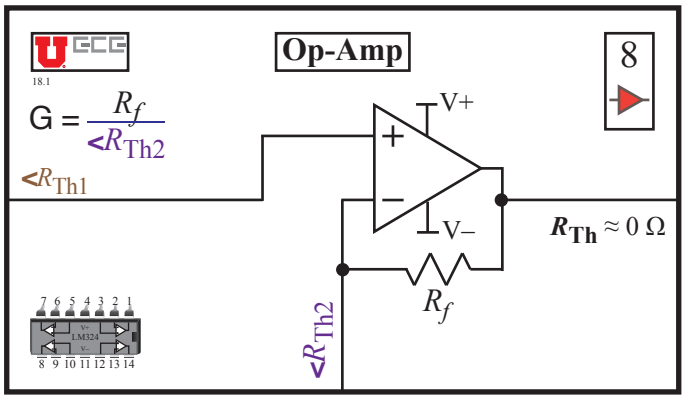
$$G = \frac{R_f}{<R_{Th2}}$$