Comparator

1

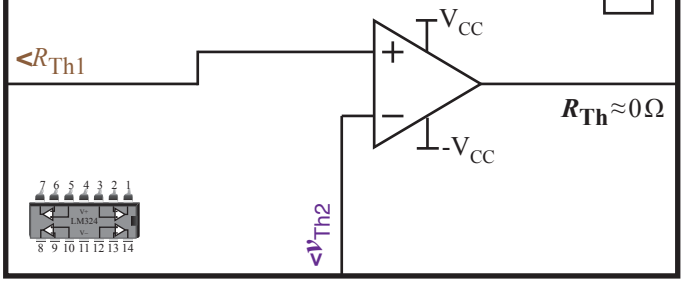

NAND Gate

5

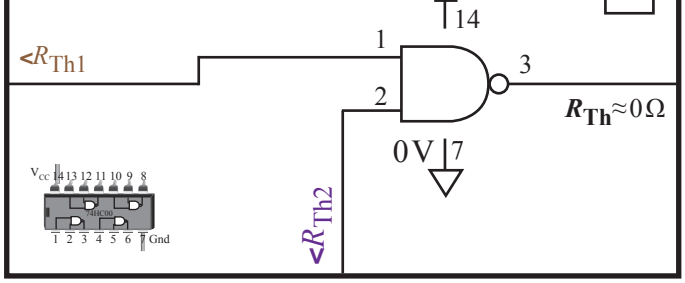

Comparator with V-Ref

2

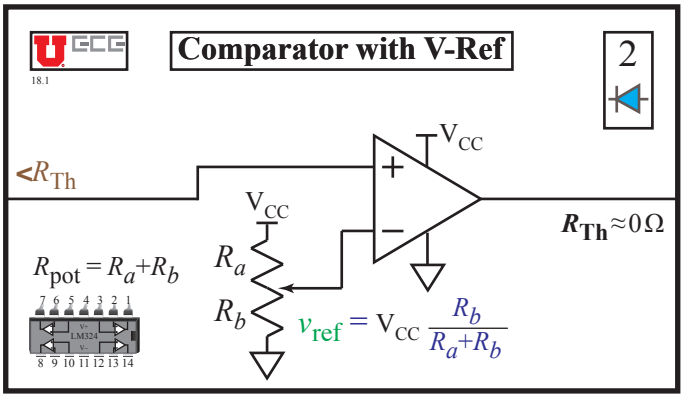

NAND Gate

6

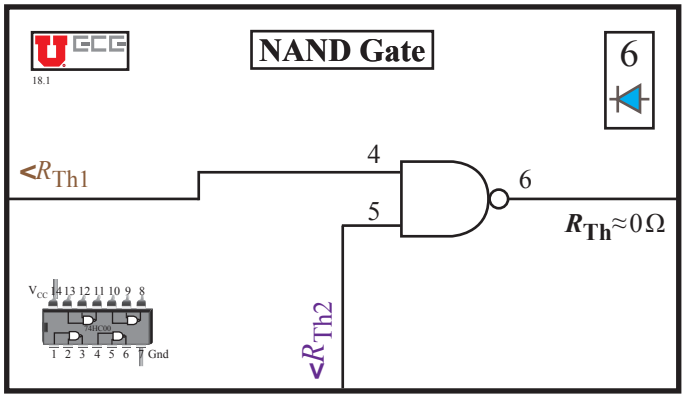

Op-Amp Level-Shifter

9

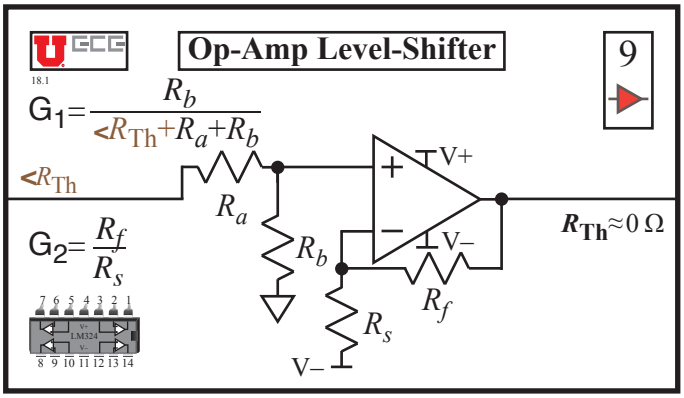

RS Flip-Flop

7

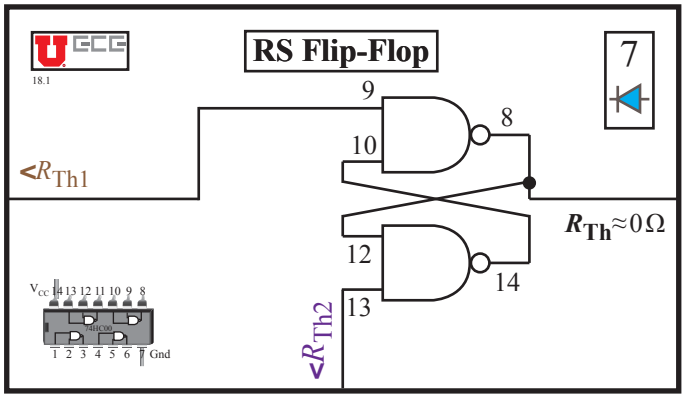

Op-Amp Level-Shifter

9

$$\frac{R_f}{R_s} = G_2 = \frac{(\Delta v_{Th})(\overline{<v_{Th}})\quad(\Delta <v_{Th})(\overline{v_{Th}})}{(<\Delta v_{Th})(V\quad)}$$

$$\frac{R_b}{<R_{Th} + R_a + R_b} = G_1 = \frac{\Delta v_{Th}}{(\Delta <v_{Th})(1 + G_2)}$$

XOR Gate
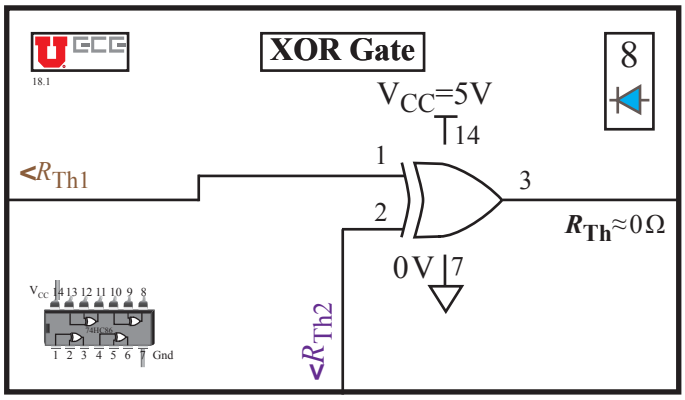
8